ECM-D70T / ECM-D70T1.5
Installation Guide

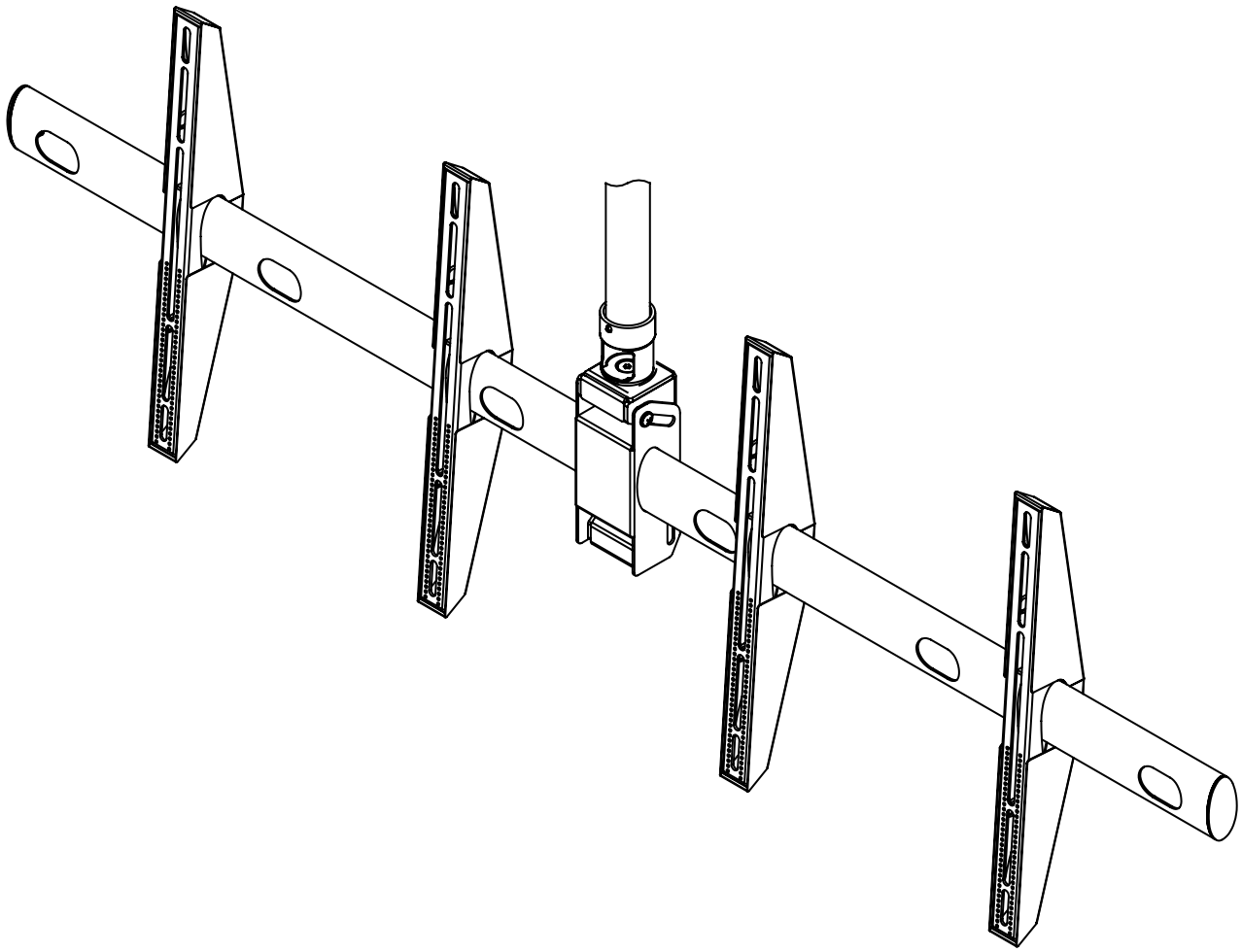

premiermounts.com | p. 800.368.9700 | e. orders@premiermounts.com
500 W Central Ave, Suite A, Brea, CA 92821 USA

ECM-D70T / ECM-D70T1.5
Installation Guide

Weight Capacity

Maximum flat-panel weight: **180lbs.**

THE CEILING STRUCTURE MUST BE CAPABLE OF HOLDING FOUR (4) TIMES THE WEIGHT OF THE FLAT PANEL AND MOUNT. IF NOT, THEN THE CEILING STRUCTURE MUST BE REINFORCED.

Warning Statements

INSTALL THE MOUNT ACCORDING TO THE INSTRUCTIONS PROVIDED BY PREMIER MOUNTS. PERFORM ALL STRUCTURAL REINFORCEMENTS BEFORE ATTACHING THE FLAT PANEL TO THE CEILING MOUNT. USE THE APPROPRIATE LIFTING DEVICE WHEN LIFTING THE FLAT PANEL INTO PLACE.

PRIOR TO THE INSTALLATION OF THIS PRODUCT, THE INSTALLATION INSTRUCTIONS MUST BE READ AND COMPLETELY UNDERSTOOD TO PREVENT PERSONAL INJURY AND PROPERTY DAMAGE. KEEP THESE INSTALLATION INSTRUCTIONS IN AN EASILY ACCESSIBLE LOCATION FOR FUTURE REFERENCE.

STOP

PREMIER MOUNTS DOES NOT WARRANT AGAINST DAMAGE CAUSED BY THE USE OF ANY PREMIER MOUNTS PRODUCT FOR PURPOSES OTHER THAN THOSE FOR WHICH IT WAS DESIGNED OR DAMAGE CAUSED BY UNAUTHORIZED ATTACHMENTS OR MODIFICATIONS, AND IS NOT RESPONSIBLE FOR ANY DAMAGES, CLAIMS, DEMANDS, SUITS, ACTIONS OR CAUSES OF ACTION OF WHATEVER KIND RESULTING FROM, ARISING OUT OF OR IN ANY MANNER RELATING TO ANY SUCH USE, ATTACHMENTS OR MODIFICATIONS.

STOP

SAFETY MEASURES MUST BE PRACTICED AT ALL TIMES DURING THE ASSEMBLY OF THIS PRODUCT. USE PROPER SAFETY GEAR AND TOOLS FOR THE ASSEMBLY PROCEDURE TO PREVENT PERSONAL INJURY.

At least two qualified people should perform the assembly procedure. Personal injury and/or property damage can result from dropping or mishandling the flat-panel.

Be aware of the mounting environment. If drilling and/or cutting into the mounting surface, always make sure that there are no electrical wires in the ceiling. Cutting or drilling into an electrical line may cause serious personal injury.

Make sure there are no water or natural gas lines inside the ceiling where the mount is to be located. Cutting or drilling into a water or gas line may cause severe property damage or personal injury.

This product is intended for indoor use only. Use of this product outdoors could lead to product failure and/or serious personal injury.

Do not install near sources of high heat. Do not install on a structure that is prone to vibration, movement or chance of impact.

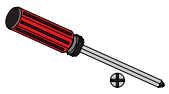

Phillips Screw Driver

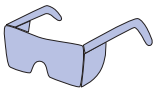

Protective Eye Wear

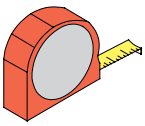

Tape Measure

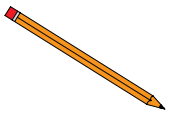

Pencil

Ladder

Included Components:

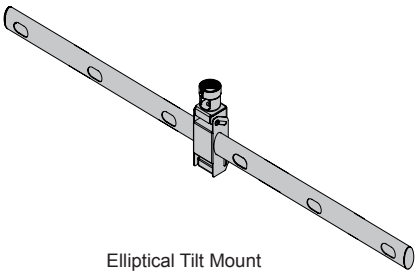

Elliptical Tilt Mount
(Qty. 1)

Mounting Brackets
(Qty. 4)

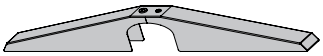

Decorative Covers
(Qty. 4)

M4 x 8mm Screw
(Qty. 4)

M4 x 12mm Screw
(Qty. 8)

M4 x 16mm Screw
(Qty. 8)

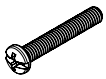

M4 x 25mm Screw
(Qty. 8)

M6 x 12mm Screw
(Qty. 8)

M6 x 16mm Screw
(Qty. 8)

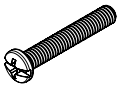

M6 x 25mm Screw
(Qty. 12)

M8 x 12mm Screw
(Qty. 8)

M8 x 16mm Screw
(Qty. 8)

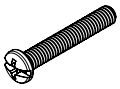

M8 x 25mm Screw
(Qty. 8)

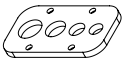

Griplate™
(Qty. 8)

Depth Indicator
(Qty. 1)

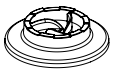

Universal Spacer
(Qty. 16)

Features:

The ECM-D70T / ECM-D70T1.5 ceiling mount fits dual flat-panels up to 50” in either portrait or landscape orientation. It offer dynamic viewing with 360° swivel and 15° of tilt. The mount’s ultra-thin design keep s the center of gravity close to the flat-panels for better balance. Integrated cable management keeps the installation clean and organized. Optional brackets are available for attaching mini PCs and digital media players and servers (see page 9).

The ECM-D70T fits a 2” NPT extension pipe, while the ECM-D70T1.5 fits a 1 1/2″ NPT extension pipe.

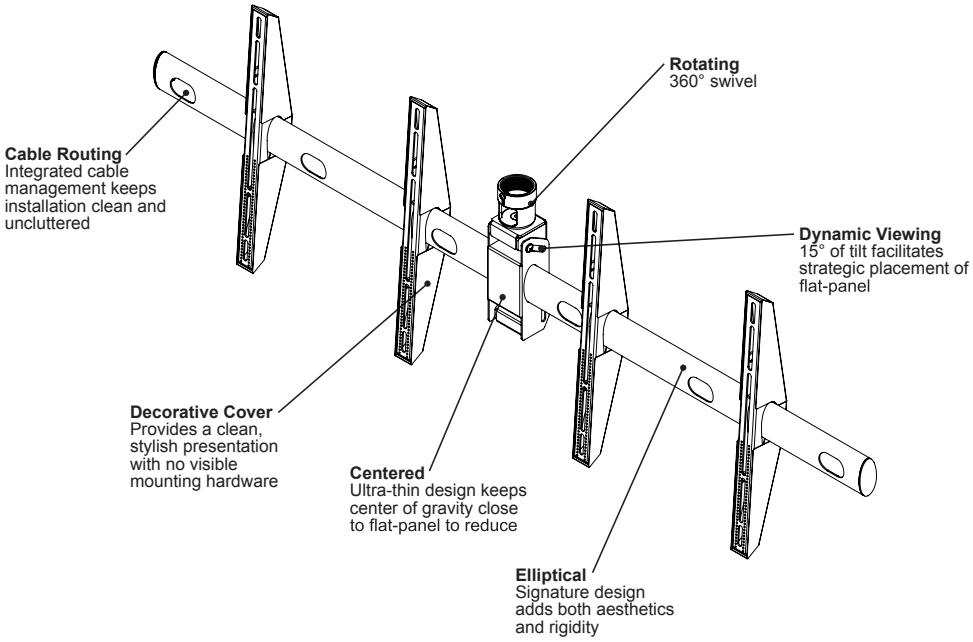

ECM-D70T / ECM-D70T1.5
Installation Guide

1 Attaching the ECM-D70T to the Ceiling

A 1 1/2" or 2" NPT threaded pipe must be firmly secured to the ceiling structure before performing the following steps.

The Phillips set screw must be backed out in order for the NPT threaded pipe to attach to the threaded coupler.

1) Align the ECM-D70T thread coupler with the threaded end of the NPT threaded pipe.
2) Thread the ECM-D70T onto the NPT threaded pipe and rotate the ECM-D70T coupler clockwise until the coupler is fully threaded onto the NPT threaded pipe.

The coupler must be threaded onto the NPT threaded pipe a minimum of four (4) complete turns.

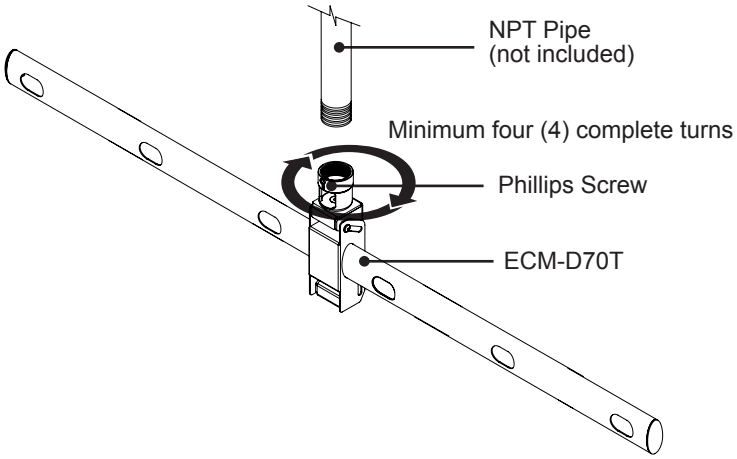

2

Once the ECM-D70T has been firmly threaded to the 1 1/2" or 2" NPT threaded pipe, use a screwdriver to tighten the Phillips screw on the thread coupler.

Ensure that all connections are secure and tight before proceeding to the next step.

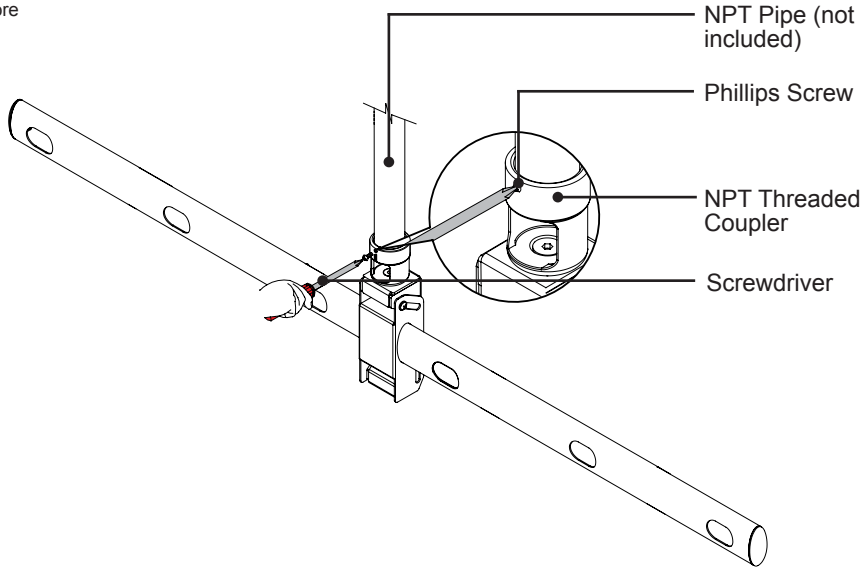

premiermounts.com | p. 800.368.9700 | e. orders@premiermounts.com

Selecting the Mounting Hardware

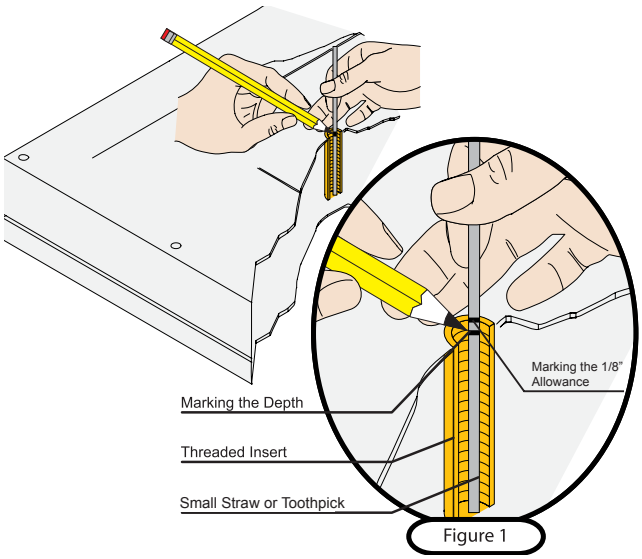

Figure 1

1) Insert a small straw or toothpick into the threaded inserts found on the back of the flat-panel.
2) Use a pencil to mark the depth of the threaded insert on the small straw or toothpick.
3) Mark the straw or toothpick 1/8" above the depth of the threaded insert, as shown in Figure 1.
4) Insert the small straw or toothpick into the remaining threaded inserts to compare and verify their depth using the straw or toothpick's 1/8" allowance mark.
5) Locate the correct diameter screw for the threaded insert.

If the screw you selected is longer than the 1/8" allowance mark on the small straw or toothpick, as shown in Figure 2 and Figure 3, do not use this screw. The screw length must not bypass the mark.

6) Test each size of the screws provided.

The correct screws should thread easily into themounting point and not pull out when tension is applied.

Figure 2

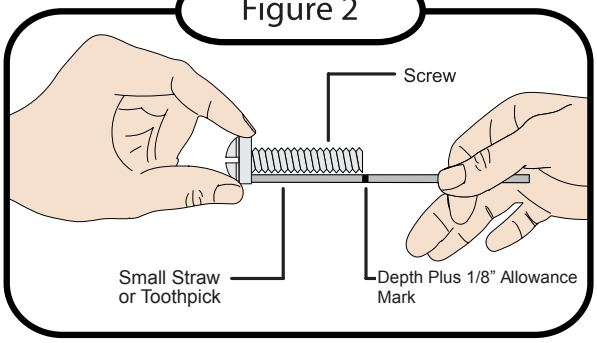

Figure 3

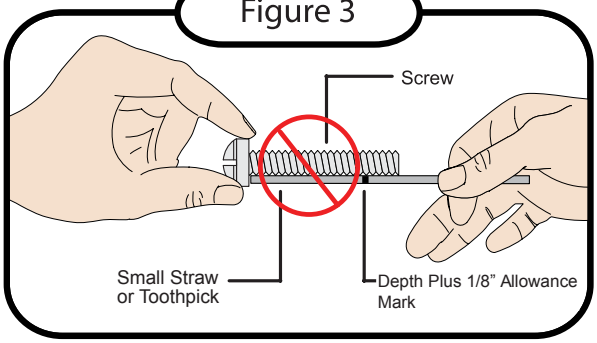

ECM-D70T / ECM-D70T1.5
Installation Guide

Griplate™ Washer Installation

Premier Mounts' Griplate™ Washers are designed to accommodate the various M4, M6, and M8 hole sizes required by flat-panels.

For Griplate™ installation, the dimples must be facing the flat-panel for the lower mounting points. For the upper mounting points, the dimples must be facing away from the flat-panel.

Do not place excessive pressure on the back of the flat-panel, as this may damage your flat-panel.

The Griplate™ Washer must be installed between the head of the mounting screw and the mounting bracket as shown.

STOP Does your flat-panel have:

- Recessed mount points?
- Uneven mount points?
- A curved back?
- Any obstruction near the mount point?

If **Yes**, you must install nylon spacers. Remove the mounting brackets, Griplate™ washers, and mounting screws from the back of the flat-panel. Proceed to the **"Nylon Spacer Installation"** section.

If **No**, skip to the **"Flat Panel Installation"** section.

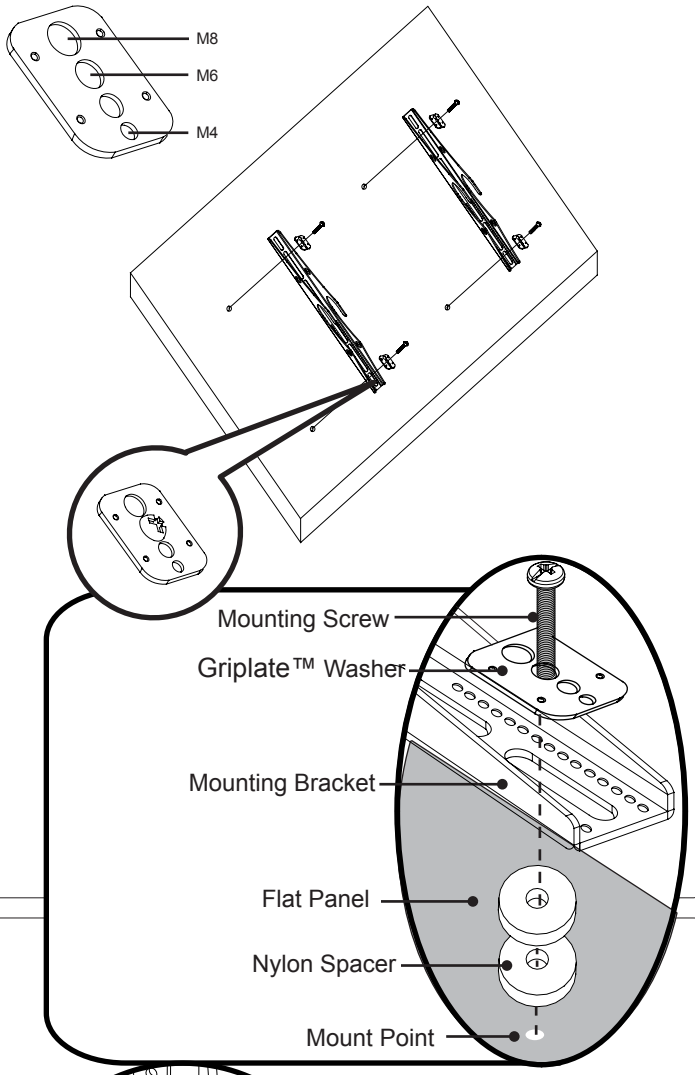

Nylon Spacer Installation

Premier Mounts' nylon spacers allow you to attach the mounting bracket to flat-panels which have recessed or uneven mount points. Each nylon spacer will add distance between the mounting bracket and your flat-panel.

The nylon spacers must only be installed between the mounting bracket and your flat-panel.

The nylon spacers will fit M4, M6, and M8 screw sizes.

Proceed to the **"Flat Panel Installation"** section.

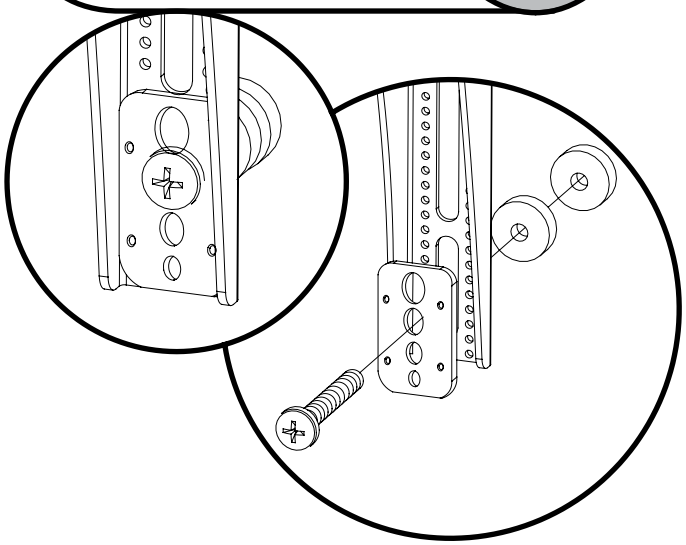

premiermounts.com | p. 800.368.9700 | e. orders@premiermounts.com

3 Flat-Panel Installation

Install the mount according to the instructions provided by Premier Mounts. Perform all structural reinforcements before attaching the flat-panel to the ceiling mount.

Do not release the flat-panel until the mounting bracket arms are fully resting on the elliptical mounting bar.

Raise the mounting bracket arms and the attached flat-panel over the elliptical mounting bar of the ECM-D70T.

The cable access ports face the rear of the flat-panel. It may be easier to pre-wire any cables prior to flat-panel installation (see Page 8).

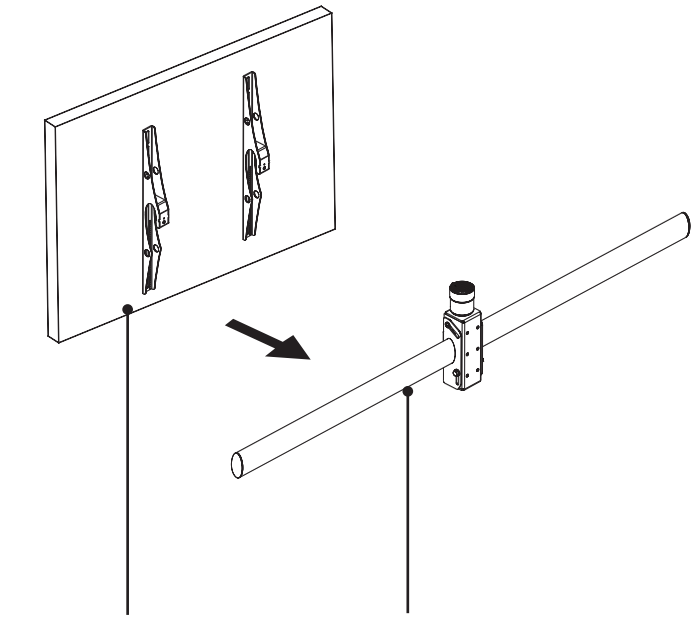

4

Lower and center the mounting bracket arms with the attached flat-panel onto the elliptical mounting bar of the ECM-D70T.

Do not release the flat-panel until the mounting bracket arms are resting fully on the elliptical mounting bar.

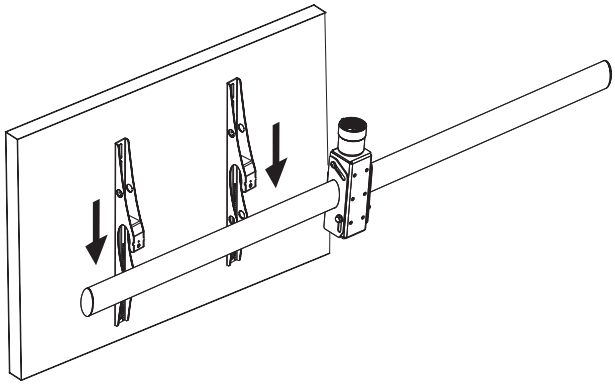

5

1) On each mounting bracket arm, insert and tighten the M6 x 25mm screw in the larger mounting hole.
2) Repeat the Flat-Panel Installation instructions for the other flat-panel.

Do not over tighten these screws.

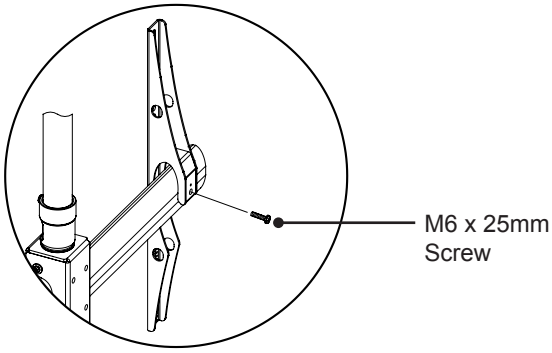

6 Attaching Decorative Covers

When attaching the decorative covers, verify the direction of the covers. The smaller mounting hole should be in position above the larger mounting hole.

1) Place the first decorative cover over the first mounting bracket arm and push firmly into place.
2) Repeat Step 1 for the second decorative cover and mounting bracket arm.

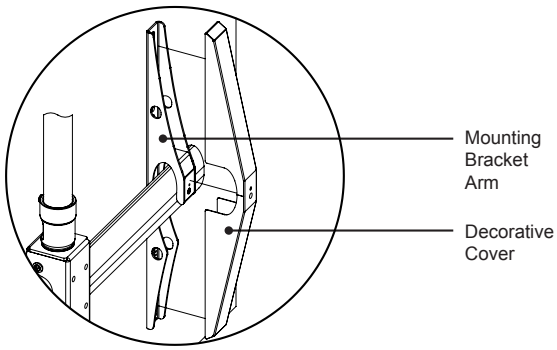

7

1) Align the mounting holes.
2) On each decorative cover, insert and tighten an M4 x 8mm screw in the smaller mounting hole.

The decorative covers should easily go over the M6 x 25mm screw.

3) Repeat the Attaching Decorative Covers instructions to attach decorative covers to the second flat-panel.

Do not over tighten these screws.

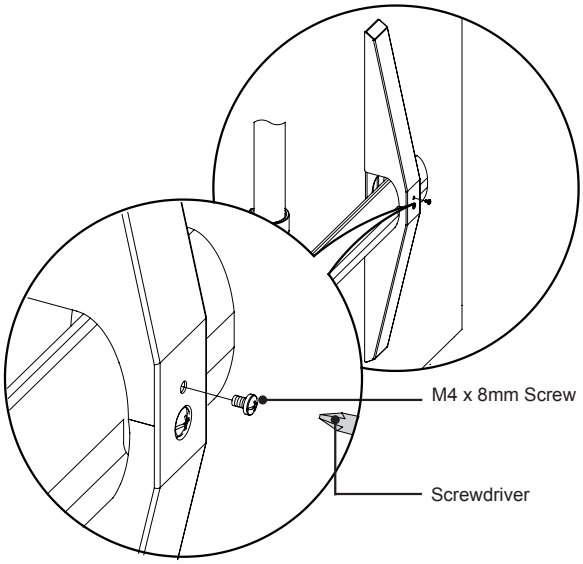

8

Route cables through the cable access holes and to their respective locations.

The cables must then be routed through the coupler, up the ceiling adapter (not included) and into the ceiling to a pre-determined source.

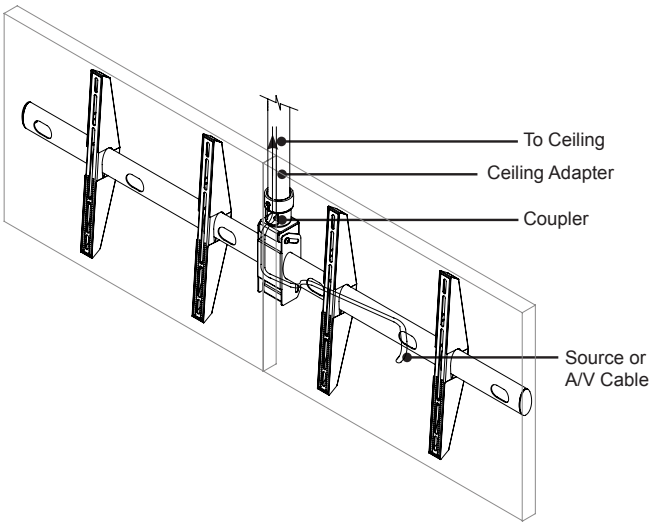

9

Tilting Positioning

Adjust the Flat Panel Friction Tilt Angle

1) Place one hand at the center top edge of the flat-panel.
2) Place the other hand on the center bottom edge of the flat-panel.
3) Using the upper hand, gently pull the top of the flat-panel towards you while the lower hand gently pushes the bottom of the flat-panel away from you.

If additional tilt friction is required, tighten the lower nut and lower bolt only, to increase the tilt friction.

Adjust the Flat Panel to the Original Position

1) Place one hand at the center top edge of the flat panel.
2) Place the other hand on the center bottom edge of the flat-panel.
3) Using the upper hand, gently push the top of the flat-panel towards the wall while the lower hand gently pulls the bottom of the flat-panel away from the wall.

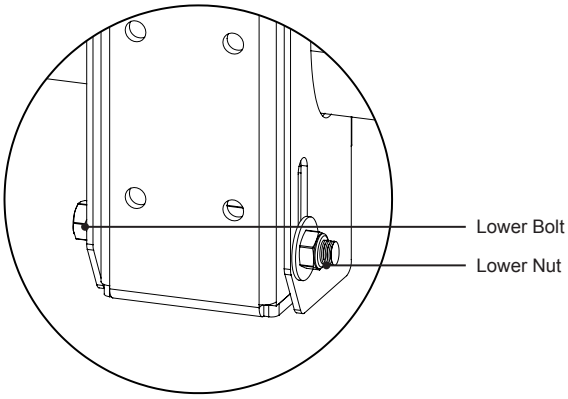

Optional Mounting Configurations and Accessories

Please refer to the installation instructions that come packaged with these products for correct installation procedures.

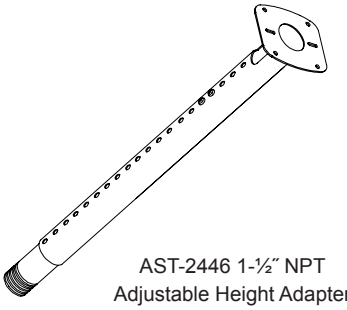

AST-2446 1-½″ NPT
Adjustable Height Adapter

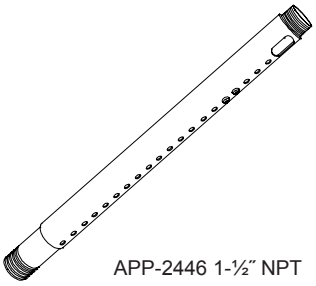

APP-2446 1-½″ NPT
Adjustable Height Adapter

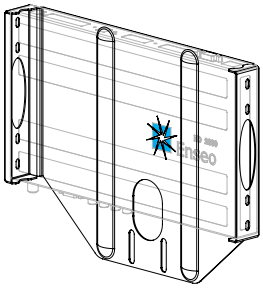

ECM-ENS
Enseo HD2000 Adapter

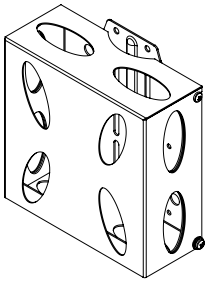

ECM-MPC
Media Player Adapter

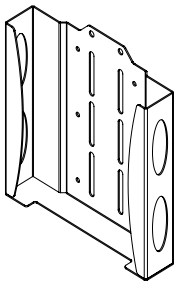

ECM-MAC2
Mac mini™ Adapter

PREMIER MOUNTS
LIMITED LIFETIME WARRANTY

What and Who is Covered by this Limited Lifetime Warranty

Premier Mounts warrants all mounting products to be free from defects in material and workmanship for the lifetime of the original installation of the product.

What Premier Mounts Will Do

At the sole option of Premier Mounts, Premier Mounts will repair or replace any product or product part that is defective. If Premier Mounts chooses to replace a defective product or part, a replacement product or part will be shipped to you at no charge, but you must pay any related labor costs.

What is Not Covered: Limitations

Premier Mounts disclaims any liability for damage to mounts, adapters, displays, projectors, other property, or personal injury resulting, in whole or in part, from improper installation, modification, use or misuse of its products.

NOTWITHSTANDING ANYTHING TO THE CONTRARY IN THIS WARRANTY, THIS WARRANTY IS LIMITED TO FIVE YEARS FROM THE DATE OF PURCHASE IN THE EVENT THAT THE WARRANTED PRODUCT IS COMMERCIALLY RENTED OUT.

Electrical products and components, such as amplifiers, speakers, motors, switches remote controls and related electrical items, are backed by a 3-year warranty.

Premier Mounts disclaims all other warranties, express or implied, including warranties of merchantability and fitness for a particular purpose. Premier Mounts is not responsible for incidental or consequential damages, including but not limited to, inability to use its products or labor costs for removing and replacing defective products or parts. Some states do not allow the exclusion or limitation of incidental or consequential damages, so the above limitation or exclusion may not apply to you.

What Customers Must Do for Warranty Service

If you discover a problem that you think may be covered by the warranty, you must report it in writing to the address below within thirty (30) days. Proof of purchase (an original sales receipt) from the original consumer purchaser must accompany all warranty claims. Warranty claims must also include a description of the problem, the purchaser's name, address, and telephone number. General inquiries can be addressed to Premier Mounts Customer Service at 1-800-368-9700. Warranty claims will not be accepted over the phone or by fax.

PREMIER MOUNTS
ATTN: Warrenty Claims
500 W Central Ave, Suite A
Brea, CA 92821

How State Law Applies

This warranty gives you specific legal rights, and you may also have other rights which vary from state to state.

Premier Mounts intends to make this manual accurate and complete. However, Premier Mounts makes no claim that the information contained herein covers all details, conditions or variations, nor does it provide for every possible contingency in connection with the installation or use of this product. The information contained in this document is subject to change without notice or obligation of any kind. Premier Mounts makes no representation of warranty, expressed or implied, regarding the information contained herein. Premier Mounts assumes no responsibility for accuracy, completeness or sufficiency of the information contained in this document.

©PREMIER MOUNTS
500 W Central Ave, Suite A
Brea, CA 92821

USA & CANADA
Phone: 800-368-9700
Fax: 800-832-4888
e. orders@premiermounts.com